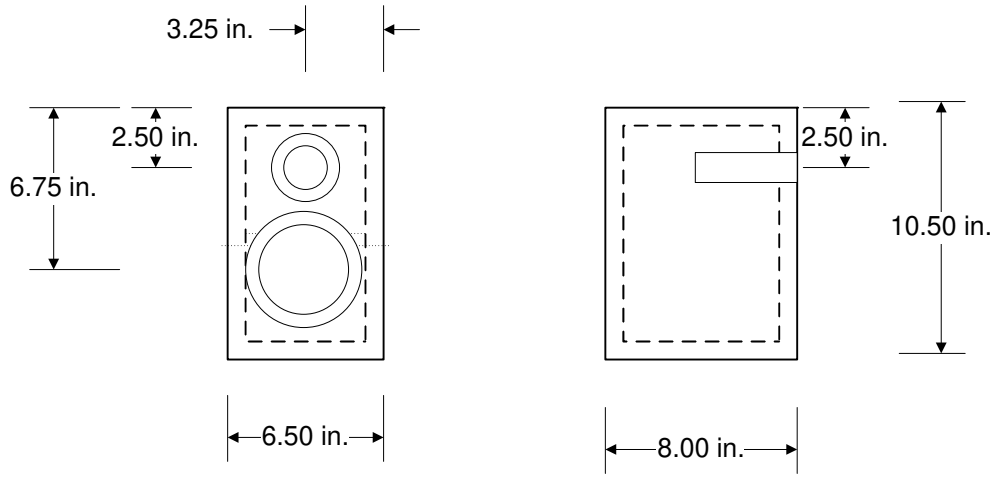

Tweeter Cut out:

72mm outer dia.
46mm Inner,
3mm recess, notch out
For terminal

Woofer cut out:
123mm outer,
95 mm inner
6.5mm recess

Vent:
1.3" dia x 4.25" L

Cabinet fill: Dacron

Tweeter: SB26STCN
Woofer: SB12NRX25
Cabinet material:
3/4" MDF

Terminal cut out as
required

Meniscus Audio Group. Inc.			
REV	Sopranos by Jeff Bagby	3-28-13	APPROVED